BrandStand
Unleash your brand

Air Column 60mm Diameter x 300mm h

Crop line

Primary Image Area
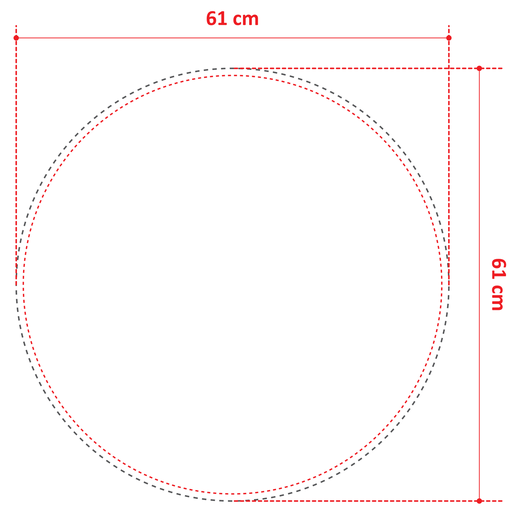
- CMYK (Includes Images)
- All text converted to outlines
- Images to be embedded within final file (atleast 100dpi at full size)
- Black to be set to C100 M100 Y100 K100
- Remove template lines
- Save final artwork as a PDF for print and supply with a JPEG proof
- Save artwork without crop marks and over print